ROHS

For reference only

Pin数	尺寸A	尺寸B
2×1	-	2.0
2×2	2.0	4.0
2×3	4.0	6.0
2×4	6.0	8.0
2×5	8.0	10.0
2×6	10.0	12.0
2×7	12.0	14.0
2×8	14.0	16.0
2×9	16.0	18.0
2×10	18.0	20.0
2×11	20.0	22.0
2×12	22.0	24.0
2×13	24.0	26.0
2×14	26.0	28.0
2×15	28.0	30.0
2×16	30.0	32.0
2×17	32.0	34.0
2×18	34.0	36.0
2×19	36.0	38.0
2×20	38.0	40.0
2×21	40.0	42.0
2×22	42.0	44.0
2×23	44.0	46.0
2×24	46.0	48.0
2×25	48.0	50.0
2×26	50.0	52.0
2×27	52.0	54.0
2×28	54.0	56.0
2×29	56.0	58.0
2×30	58.0	60.0
2×31	60.0	62.0
2×32	62.0	64.0
2×33	64.0	66.0
2×34	66.0	68.0
2×35	68.0	70.0
2×36	70.0	72.0
2×37	72.0	74.0
2×38	74.0	76.0
2×39	76.0	78.0
2×40	78.0	80.0
2×41	80.0	82.0
2×42	82.0	84.0
2×43	84.0	86.0
2×44	86.0	88.0
2×45	88.0	90.0
2×46	90.0	92.0
2×47	92.0	94.0
2×48	94.0	96.0
2×49	96.0	98.0
2×50	98.0	100.0
2×51	100.0	102.0
2×52	102.0	104.0

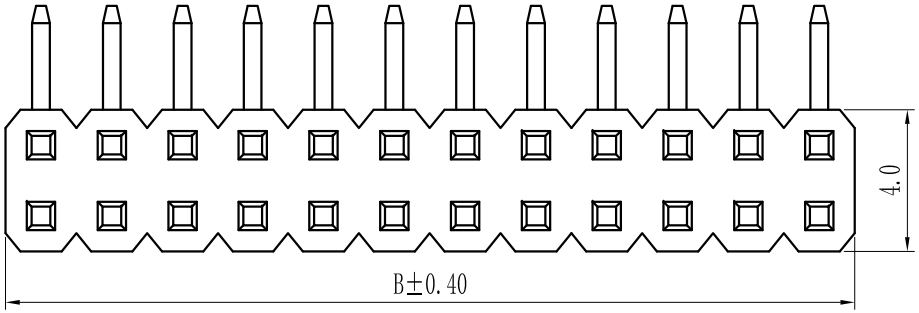

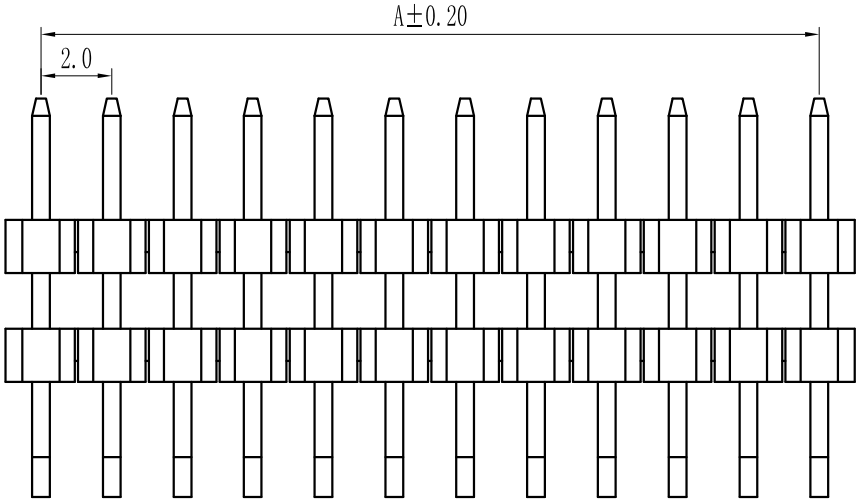

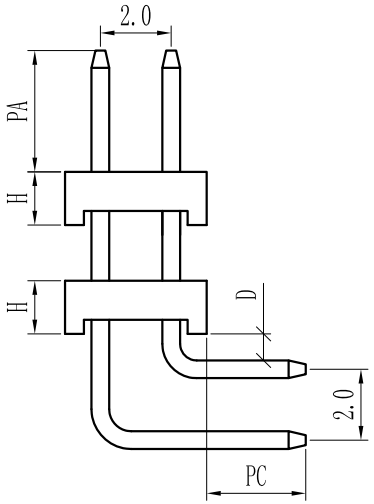

PCB LAYOUT

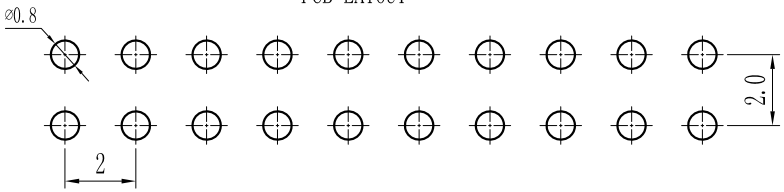

Specification:
Current Rating : 1.5AMP
Temperature Range : -40℃to+105℃
Contact Resistance : 20mΩ Max
Insulation Resistance : 1000MΩ Min
Withstanding Voltage : AC 500V
Material:
Insulator : Polyester (UL94V-0)
Standard:PBT/PA6T/LCP
Contact: Brass
Plating : Au or Sn Over 50u″ Ni

Height
H=1.0mm、1.5mm、2.0mm、3.0mm

REV.	REVISION RECORD	DATE

UNIT: MM
SIZE: A4

GENERAL TOLERANCES	
LINEAR	ANGLES
0.0±0.25	X° REF±6°
0.00±0.15	X° ±3°
0.000±0.08	X° X'±2°

SCALE: 1:1	NAME	DATE
APPROVED		
DESIGNER		
DRAWN		

深圳市联索连接器有限公司
SHENZHEN UNICABLE CONNECTOR CO., LTD.
公司网址WWW.SZLSTC.CN 公司电话0755-23765650
公司邮箱SZLSTC@126.COM 公司传真0755-23765753

TITLE: Pitch2.00mm Pin Header, Dual Plastic, Dual Row, Right Angle Type

PART. NO: LSPH-0060
DWG. NO: ENDE0060
REV: A0
SHEET: 1/1